Radial insert ball bearing

UK200 Series-UK209+HA2309

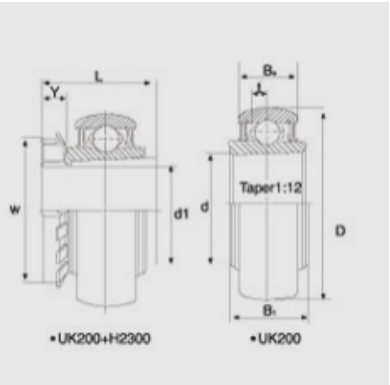

Bearing No.	**UK209+HA2309**
d1	
(in.)	1 7/16
(mm)	40
Dimensions（mm）	
D	85
L	50
d	45
Bi	33
Be	22
T	6.3
Y	11
W	65
Basic Load Rating (kN)	
Dynamic	3180
Static	2050

Luoyang Auto Bearing Co.,Ltd-Tel:0598-3607100-Email:moore@lyautobearing.com-http://www.auto-bearing.com