Radial insert ball bearing

UC300 Series-UC314-44

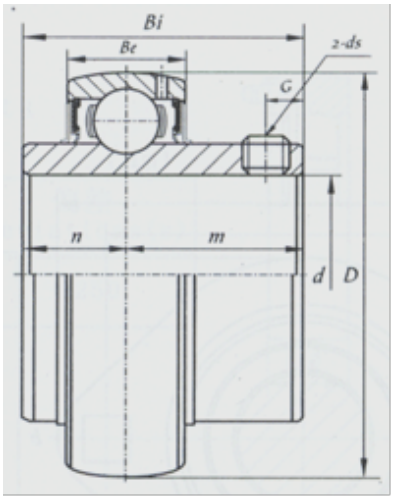

Bearing No.	UC314-44
d	
(mm)	69.85
(in.)	2.75
Dimensions（mm）	
D	150
Bi	78
Be	40
n	33
m	45
G	12
ds	1/2-20UNF

Luoyang Auto Bearing Co.,Ltd-Tel:0598-3607100-Email:moore@lyautobearing.com-http://www.auto-bearing.com